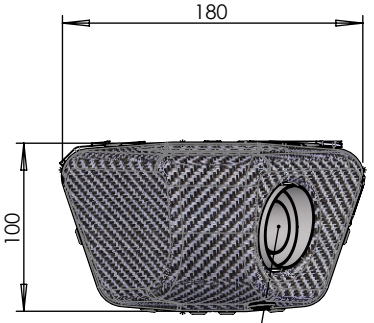

dB-killer n.47
Cod. 308232801

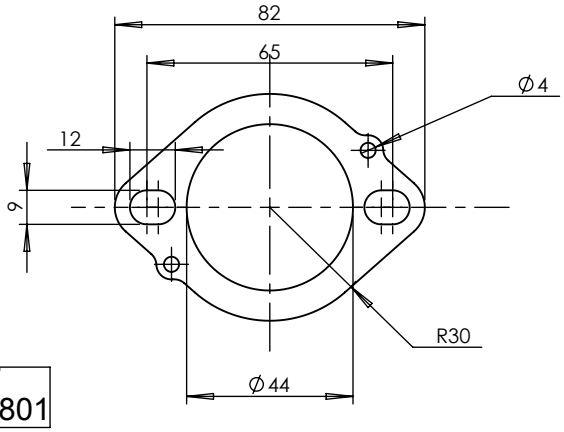

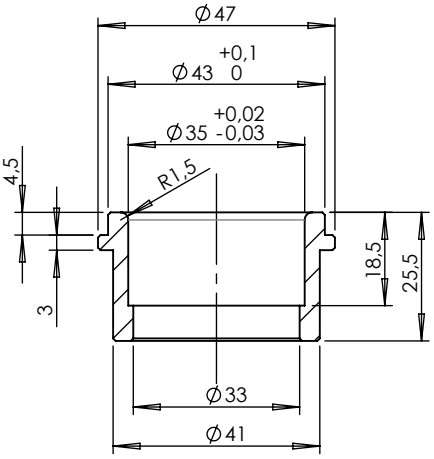

Knurled screw
M8x35 Z.B.
Cod. 200296

Knurled nut M8
Cod. 200298

Underbody Silencer
Cod.3014148471

2 Flange "112A"
Cod. 204569

Gasket Øe.17,85 x Øi. 12,3
x h 1,5 Cod.204091

2 busher
Cod.204833

Lambda Plug:
M12 x 1,25
Stainless S.
Cod.205123

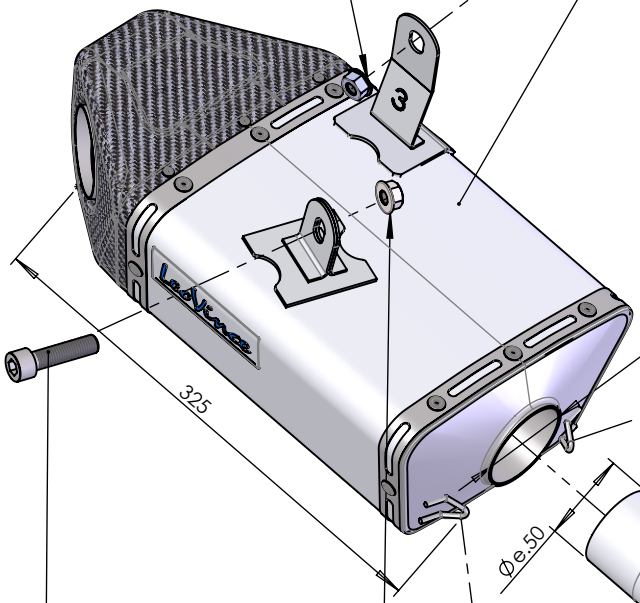

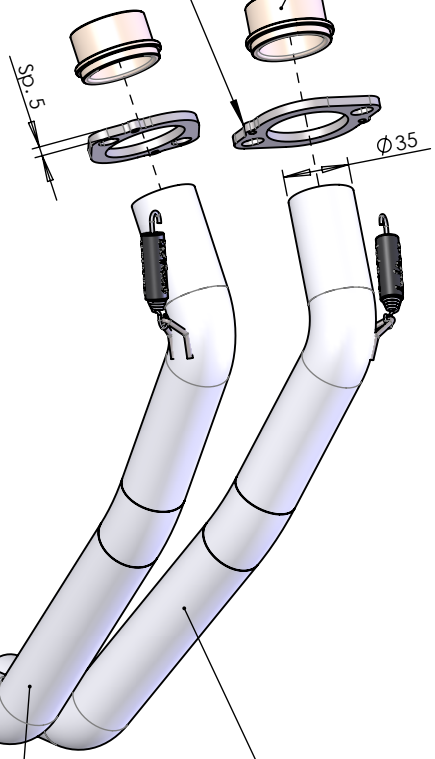

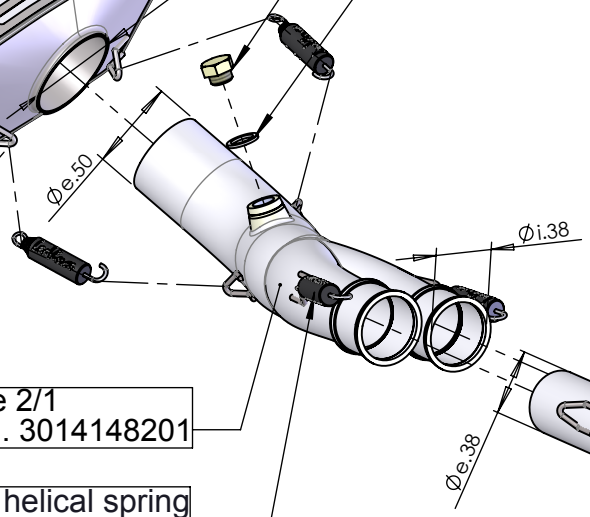

Allen screw
M10x40x1,25
T.C.E.I. Z.B.
Cod. 204109

Knurled nut M10x1,25
Cod. 203039

Pipe 2/1
Cod. 3014148201

6 Short helical spring
tensile
Cod.204387

6 Short tube in
silicon rubber
Cod.204412

Pipe DX
Cod. 3014030202

Pipe SX
Cod. 3014030201

Art. 8796 YAMAHA MT07

Full System 2/1 - SBK UNDERBODY -